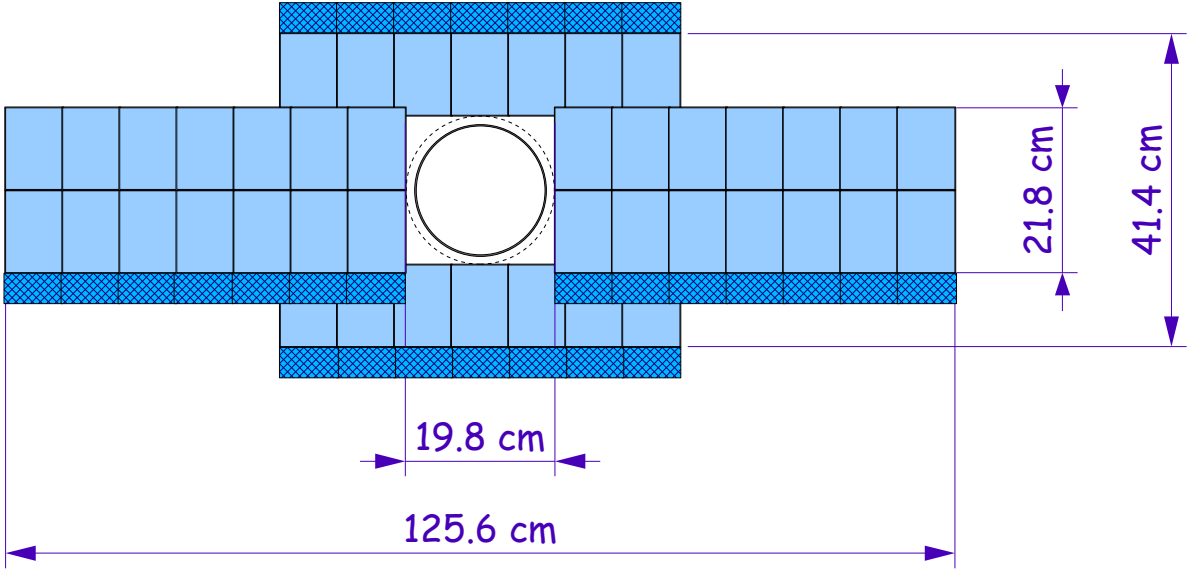
21.8 cm
41.4 cm
19.8 cm
125.6 cm